

# TECHNICAL SPECIFICATIONS

## STACKPRO™ CLEAR EDGE GLASS SYSTEMS

Balcony facades

Alfresco enclosures

Servery Windows

Operable Walls

CLEAREDGE

FRAMELESS RETRACTABLE GLASS

## Specifying Clear Edge Glass

When specifying the Clear Edge system please feel free to contact our head office directly for guidance, especially in regards to Australian Standards Wind loading AS1288 Sup 6 the Two Edged Support Table. Tel: 03 9770 8164

## Sample Specification



**SUMMARY**

The glass operable wall will be a StackPro™ Clear Edge System supplied by Clear Edge Glass Tel: 03 9770 8164
This will be consist of top support, manually operated panels that can slide into place and form a weather resistance closure.



CLEAREDGE
FRAMELESS RETRACTABLE GLASS

## Specification Details

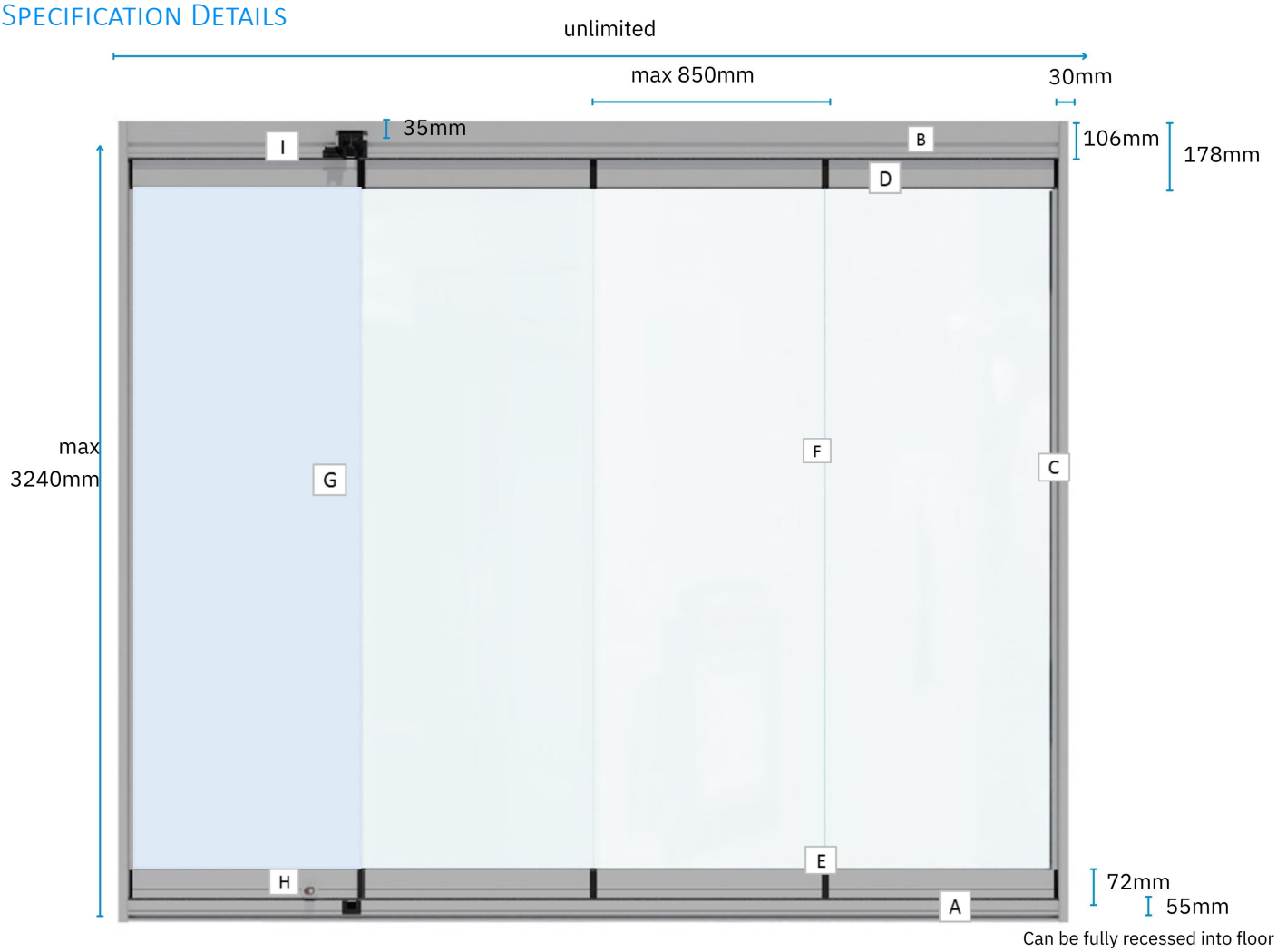


| ITEM | DESCRIPTION | WIDTH | DETAIL |
|---|---|---|---|
| A | Floor Track | 3/55mm | Page 4 |
| B | Top Running Track | 106mm | Page 5 |
| C | Wall Post | 30mm | Page 5 |
| D | Glass Holding Profile | 72mm | Page 6 |
| E | Inter-Locking End Caps | | Page 6 |
| F | Weather Seal | 20mm | Page 6 |
| G | Handle Option | | Handle PDF |
| H | Sill Lock | | Handle PDF |
| I | Top Track Roller Exit Point | | N/A |

## GLASS SPECS

| Description | A Grade Toughened Safety Polished AS1288 | | |
|---|---|---|---|
| Product | STANDARD | PREMIUM | ULTIMATE |
| Thickness Option | 10mm | 12mm | 15mm |
| Weight | 26kg/m² | 32kg/m² | 40kg/m² |
| | | | |



Glass panel height must be guided by

- Australian Standards—Two Edge Support Table AS1288
- Wind Classification of the installation area

✓The higher the wind load, the lower the glass height
✓The higher the glass, the narrower each panel

# FLOOR TRACK OPTIONS

| Option 1 | Bottom Fully Recessed  Track |
|---|---|
| Description | Aluminium Bottom Track, with Flange Detail |
| Application | Fully Recessed |
| CAD File Link | 33-01-04 |

| Specify Code | Finish |
|---|---|
| 33-01-04 | Powder Coat—Dulux |
| | Powder Coat—Interpon |
| | Anodized |

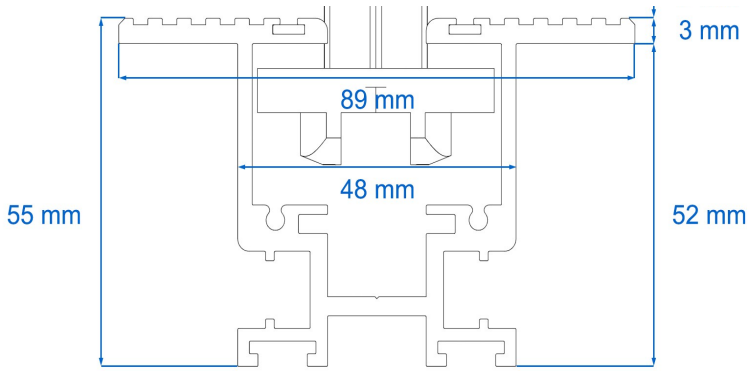







## Features

1. Fully flush bottom track
2. Recessed into channel
3. Lip design for seamless integration  into existing floor
4. Guide track only

| Option 2 | Bottom Raised or Stepped  Track |
|---|---|
| Description | Aluminium Bottom Track, with No Flange |
| Application | Stepped Floor, Counter Tops, can be Recessed |
| CAD File Link | 33-01-03 |

| Specify Code | Finish |
|---|---|
| 33-01-03 | Powder Coat—Dulux |
| | Powder Coat—Interpon |
| | Anodized |

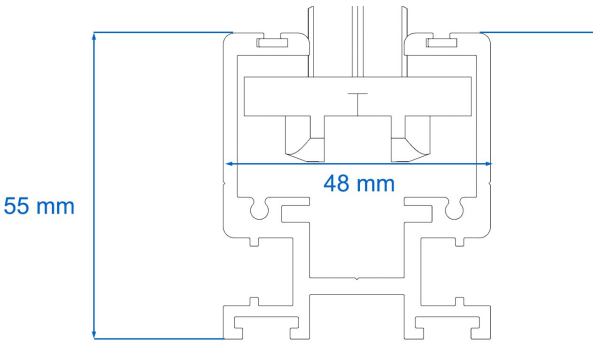




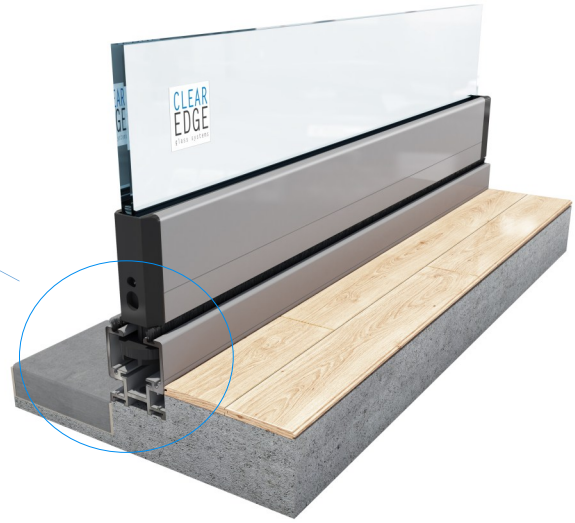


## Features

1. Raised bottom track
2. For variation in floor levels from the inside to the outside
3. For balustrade applications
4. Guide track only

## TOP TRACKS

| | 1. Head Track 2. Compensating Profile |
|---|---|
| Description | Aluminium Top Running Track |
| Application | Variation in floor levels and Balustrades |
| CAD File Link | OPEN IN—33-01-01 OI OPEN OUT 33-01-01 OO |

| Specify Direction | Specify Code |
|---|---|
| OPEN INSIDE or OPEN OUTSIDE | I or O |
| OPEN: LEFT or RIGHT or BI PARTING | L or R or L-R |

Direction always taken from inside the area looking to the OUTSIDE

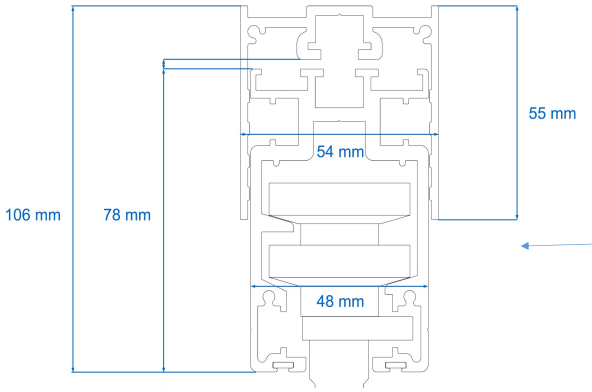


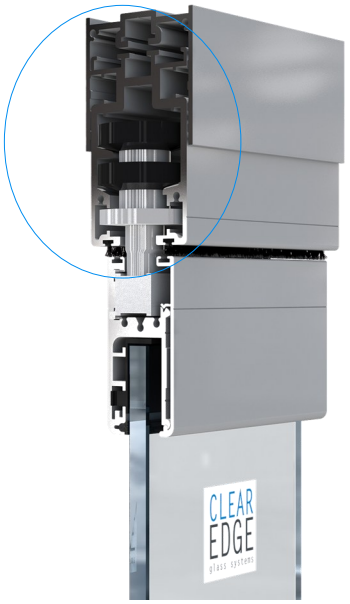


2



1

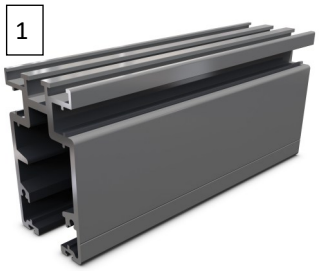

### Features

1. Adjustable track with the two-profile track design
2. Allows for building movement (settlement)
3. Easy Allen Key adjustment 10mm up 10mm down

## WALL POST

| Description | Aluminium Side Tracks |
|---|---|
| Application | External Applications |
| CAD File Link | 33-01-07 |

| Specify Code | Finish |
|---|---|
| N/A | Powder Coat—Dulux |
| | Powder Coat—Interpon |
| | Anodized |

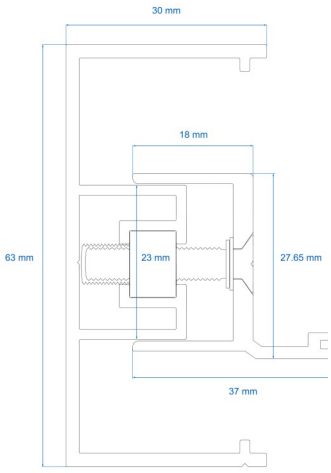


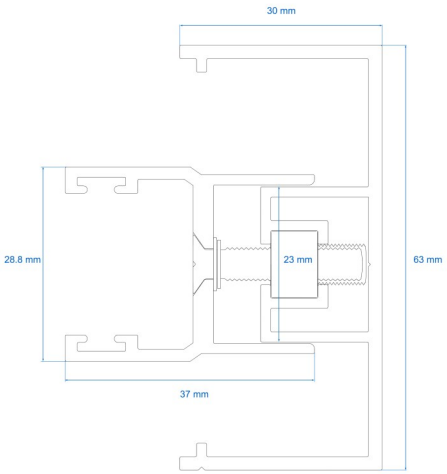


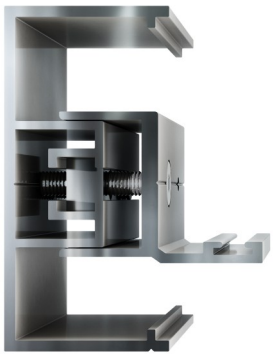

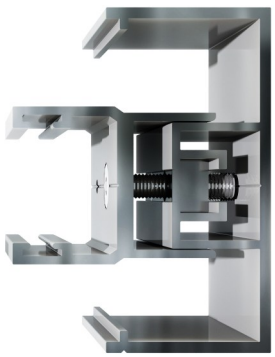

### Features

1. Adjustable posts
2. Increase weather rating

## GLASS CLAMP PROFILE AND COVER PLATE

| | |
|---|---|
| Description | Aluminium glass holding profile |
| Application | ALL |
| CAD File Link | Included in Top and Floor track detail |

| **Specify Code** | **Finish** |
|---|---|
| N/A | Powder Coat—Dulux |
| | Powder Coat—Interpon |
| | Anodized |

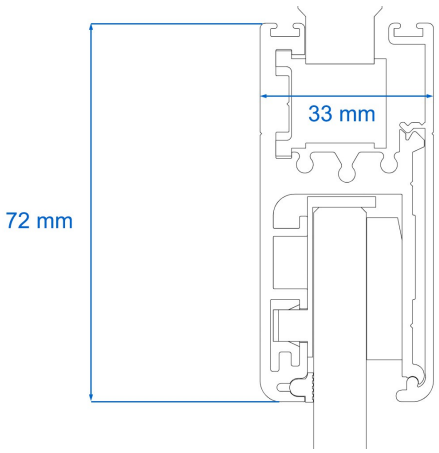


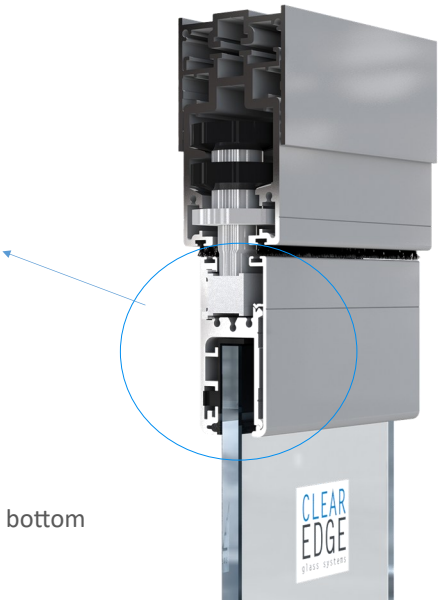






### Features

1. Glass mechanically fixed into panel by top and bottom clamping profile
2. All working parts concealed with Cover Strip

## PANEL INTER-LOCK END CAP

| Interlocking Male and Female End Caps attached to Clamping Profiles |
|---|
| Panel Detail |

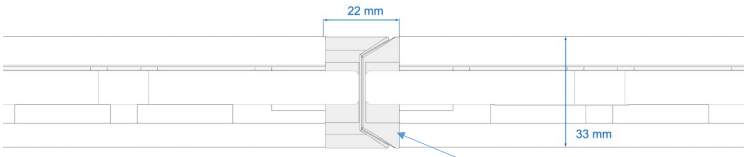


Male



Female



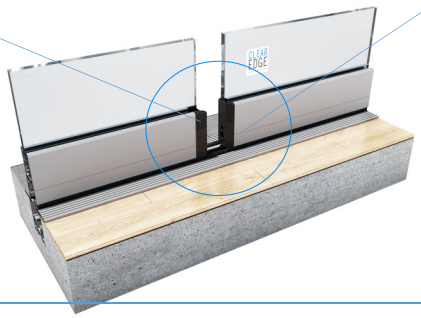

### Features

1. Inter-locking created stability
2. Allows unit to work as a framed united when closed
3. Allows for higher wind load achievements

## GLASS PANEL SEALING

| OPTIONAL: UV stable Clear Polymer Weather Seal | |
|---|---|
| Sliding Panel Detail (H) | Access Panel Detail (h) |





### Features

1. Tight seal for no air infiltration
2. UV stable material for durability
3. Easily removable for cleaning
4. Replaceable every 3-4 years

[Space between glass panels without Weather Seal 3-4mm ]

## CROSS-SECTION

CAD FILE LINK: Multiple Views

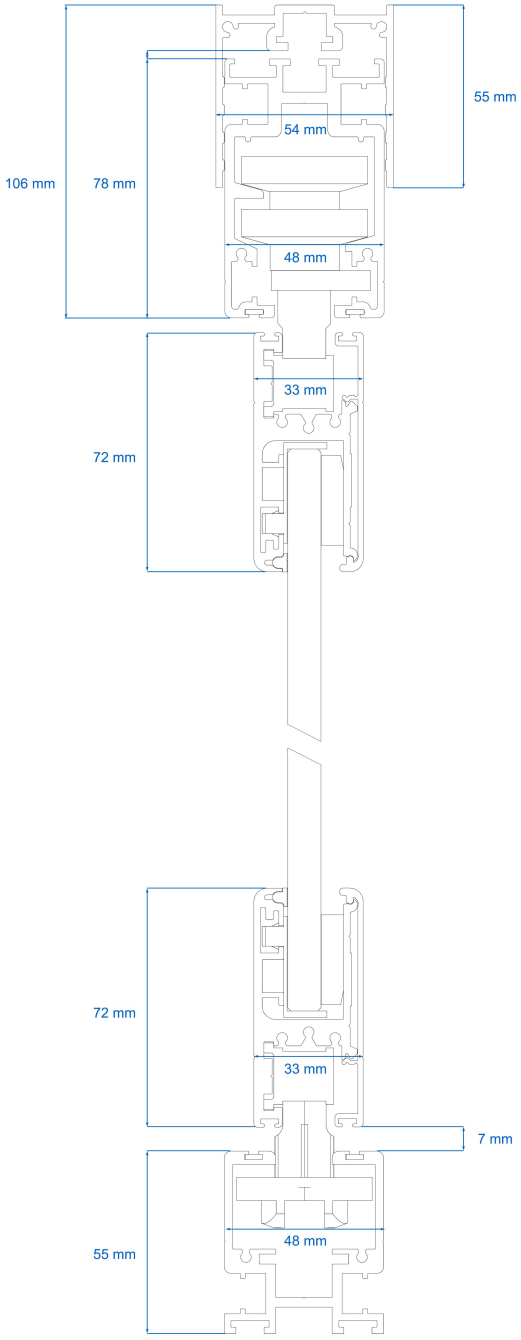


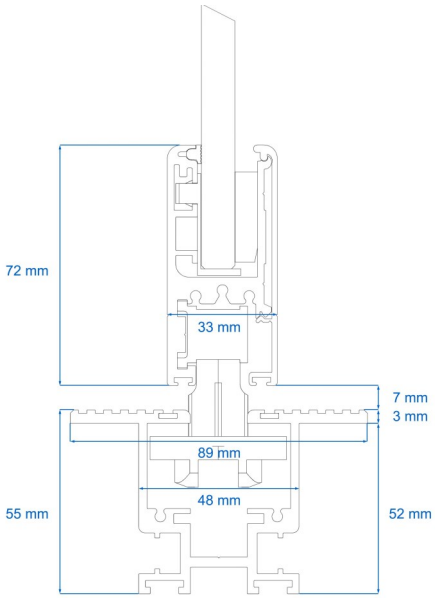


## CONFIGURATION OPTIONS

Each system is made to order with multiple design options.

- Curved - segmented
- Straight
- 90 corner

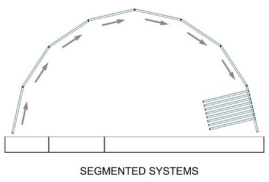


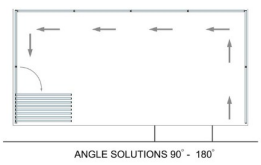


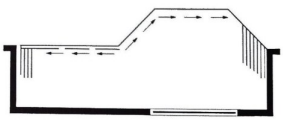

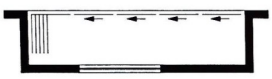

## HANDLE AND LOCKING OPTIONS

Please click the link below to access the Handle and Locking Option document

Click → Handle and Locking Options

HEAD OFFICE
3/13 Gateway Drive, Carrum Downs, Melbourne, Australia.

1300 236 326

03 9770 8164

info@clearedgeglass.com.au

ABN 97 631 413 879

AUSTRALIAN GLASS & WINDOW ASSOCIATION MEMBER

CLEAREDGE
FRAMELESS RETRACTABLE GLASS